ST202B
ST202C

5 V powered multi-channel RS-232 drivers and receivers

Features

- Supply voltage range: 4.5 to 5.5 V
- Supply current no load (typ.): 1.5 mA
- Transmitter output voltage swing (Typ): ± 9 V
- Transition slew rate (typ.): 12 V/ms
- Receiver propagation delay (typ.): 0.1 ms
- Compatible with MAX202
- Receiver input voltage range: ± 30 V
- Data rate (typ.): 400 kbp/s
- Operating temperature range:
  -40 to 85 °C, 0 to 70 °C

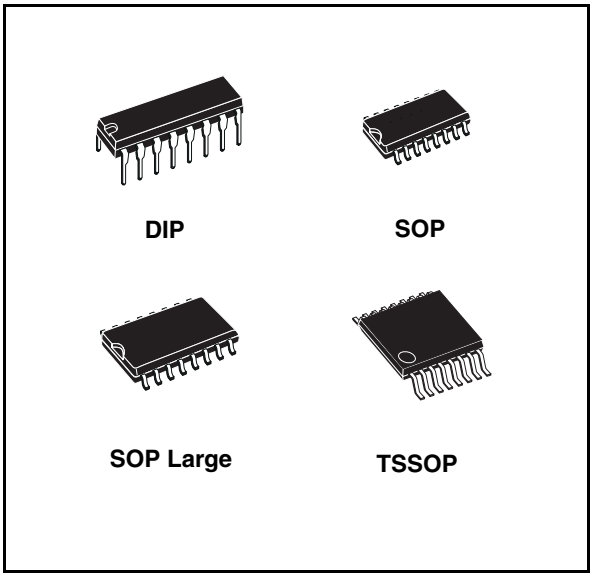

Description

The ST202 is a 2 driver, 2 receiver device following EIA/TIA-232 and V.28 communication standard. It is particularly suitable for applications where ± 12 V is not available. The ST202 uses a single 5 V power supply and only four external capacitors (0.1 µF). Typical application are in: portable computers, low power modems, interfaces translation, battery powered RS-232 networks.

Table 1. Device summary

Order code	Temperature range	Package	Packaging
ST202CN	0 to 70 °C	DIP-16	25 parts per tube / 40 tube per box
ST202BN	-40 to 85 °C	DIP-16	25 parts per tube / 40 tube per box
ST202BD	-40 to 85 °C	SO-16 (tube)	50 parts per tube / 20 tube per box
ST202CDR	0 to 70 °C	SO-16 (tape and reel)	2500 parts per reel
ST202BDR	-40 to 85 °C	SO-16 (tape and reel)	2500 parts per reel
ST202CWR	0 to 70 °C	SO-16 Large (tape and reel)	1000 parts per reel
ST202CTR	0 to 70 °C	TSSOP16 (tape and reel)	2500 parts per reel
ST202BTR	-40 to 85 °C	TSSOP16 (tape and reel)	2500 parts per reel

Contents

1 Pin configuration 3

2 Maximum ratings 4

3 Electrical characteristics 5

4 Typical application 7

5 Typical performance characteristics 8

6 Package mechanical data 9

7 Revision history 17

1 Pin configuration

Figure 1. Pin connections (top view)

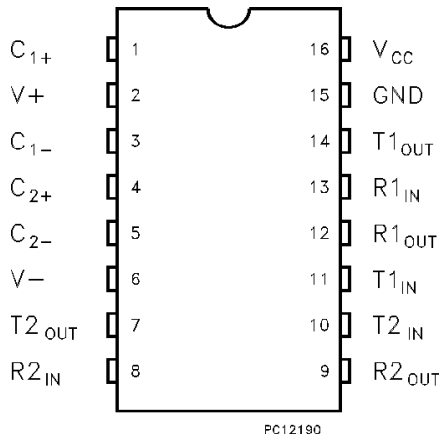

Table 2. Pin description

Pin n°	Symbol	Note
1	C_1+	Positive terminal for the first charge pump capacitor
2	V+	Doubled voltage terminal
3	C_1-	Negative terminal for the first charge pump capacitor
4	C_2+	Positive terminal for the second charge pump capacitor
5	C_2-	Negative terminal for the second charge pump capacitor
6	V-	Inverted voltage terminal
7	$T2_{OUT}$	Second transmitter output voltage
8	$R2_{IN}$	Second receiver input voltage
9	$R2_{OUT}$	Second receiver output voltage
10	$T2_{IN}$	Second transmitter input voltage
11	$T1_{IN}$	First transmitter input voltage
12	$R1_{OUT}$	First receiver output voltage
13	$R1_{IN}$	First receiver input voltage
14	$T1_{OUT}$	First transmitter output voltage
15	GND	Ground
16	V_{CC}	Supply voltage

2 Maximum ratings

Table 3. Absolute maximum ratings

Symbol	Parameter	Value	Unit
V_{CC}	Supply voltage	-0.3 to 6	V
V+	Extra positive voltage	(V_{CC} -0.3) to 13.2	V
V-	Extra negative voltage	0.3 to -13.2	V
T_{IN}	Transmitter input voltage range	-0.3 to (V_{CC} + 0.3)	V
R_{IN}	Receiver input voltage range	±30	V
T_{OUT}	Transmitter output voltage range	±15	V
R_{OUT}	Receiver output voltage range	-0.3 to (V_{CC} + 0.3)	V
T_{SCTOUT}	Short circuit duration on T_{OUT}	infinite	

Note: Absolute maximum ratings are those values beyond which damage to the device may occur. Functional operation under these condition is not implied.

3 Electrical characteristics

Table 4. Electrical characteristics
(C_1 - C_4 = 0.1 µF, V_{CC} = 5 V ± 10 %, T_A = -40 to 85 °C, unless otherwise specified. Typical values are referred to T_A = 25 °C).

Symbol	Parameter	Test condition	Min.	Typ.	Max.	Unit
I_{SUPPLY}	V_{CC} power supply current	No Load		1.5	4	mA

Table 5. Transmitter electrical characteristics
(C_1 - C_4 = 0.1 µF, V_{CC} = 5 V ± 10 %, T_A = -40 to 85 °C, unless otherwise specified. Typical values are referred to T_A = 25 °C).

Symbol	Parameter	Test condition	Min.	Typ.	Max.	Unit
V_{TOUT}	Output voltage swing	All transmitter outputs are loaded with 3kΩ to GND	±5	±9		V
I_{TIL}	Logic pull-up current	T_{IN} = 0V		5	40	µA
V_{TIL}	Input logic threshold low		0.8	1.4		V
V_{TIH}	Input logic threshold high			1.4	2	V
SR_T	Transition slew rate	T_A = 25°C, V_{CC} = 5V R_L = 3 to 7kΩ, C_L = 50 to 2500pF (1)	6	12	30	V/µs
D_R	Data rate	(2)	200	400		kbits/s
R_{TOUT}	Transmitter output resistance	V_{CC} = V+ = V- = 0V V_{OUT} = ±2V	300			Ω
I_{SC}	Transmitter output short circuit current	One T_{XOUT} to GND	±7	±22		mA
t_{DT}	Propagation delay time	TTL-CMOS IN to RS-232 OUT C_L = 150pF (50% to 50%)		1.3	3.5	µs

1. Measured from 3 V to -3 V or from -3 V to 3 V
2. One transmitter output is loaded with R_L = 3 kΩ to 7 kΩ, C_L = 50 to 1000 pF

Table 6. Receiver electrical characteristics
(C_1 - C_4 = 0.1 µF, V_{CC} = 5 V ± 10 %, T_A = -40 to 85 °C, unless otherwise specified. Typical values are referred to T_A = 25 °C).

Symbol	Parameter	Test condition	Min.	Typ.	Max.	Unit
V_{RIN}	Receiver input voltage operating range		-30		30	V
R_{RIN}	RS-232 input resistance	T_A = 25°C	3	5	7	kΩ
V_{RIL}	RS-232 input threshold low		0.8	1.3		V
V_{RIH}	RS-232 input threshold high			1.8	2.4	V
V_{RIHYS}	RS-232 input hysteresis	V_{CC} = 5V	0.2	0.5	1	V
V_{ROL}	TTL/CMOS output voltage low	I_{OUT} = 3.2mA (to V_{CC})		0.2	0.4	V
V_{ROH}	TTL/CMOS output voltage high	I_{OUT} = 1mA (to GND)	3.5	V_{CC}-0.2		V
I_{SCR}	Receiver output short circuit current	to GND	2	10		mA
		to V_{CC}	10	30		
t_{DR}	Propagation delay time	C_L = 150pF (1)		0.1	0.5	µs

1. RS-232 in to TTL-CMOS out (from 50% to 50%)

4 Typical application

Figure 2. Application circuit (1) (2)

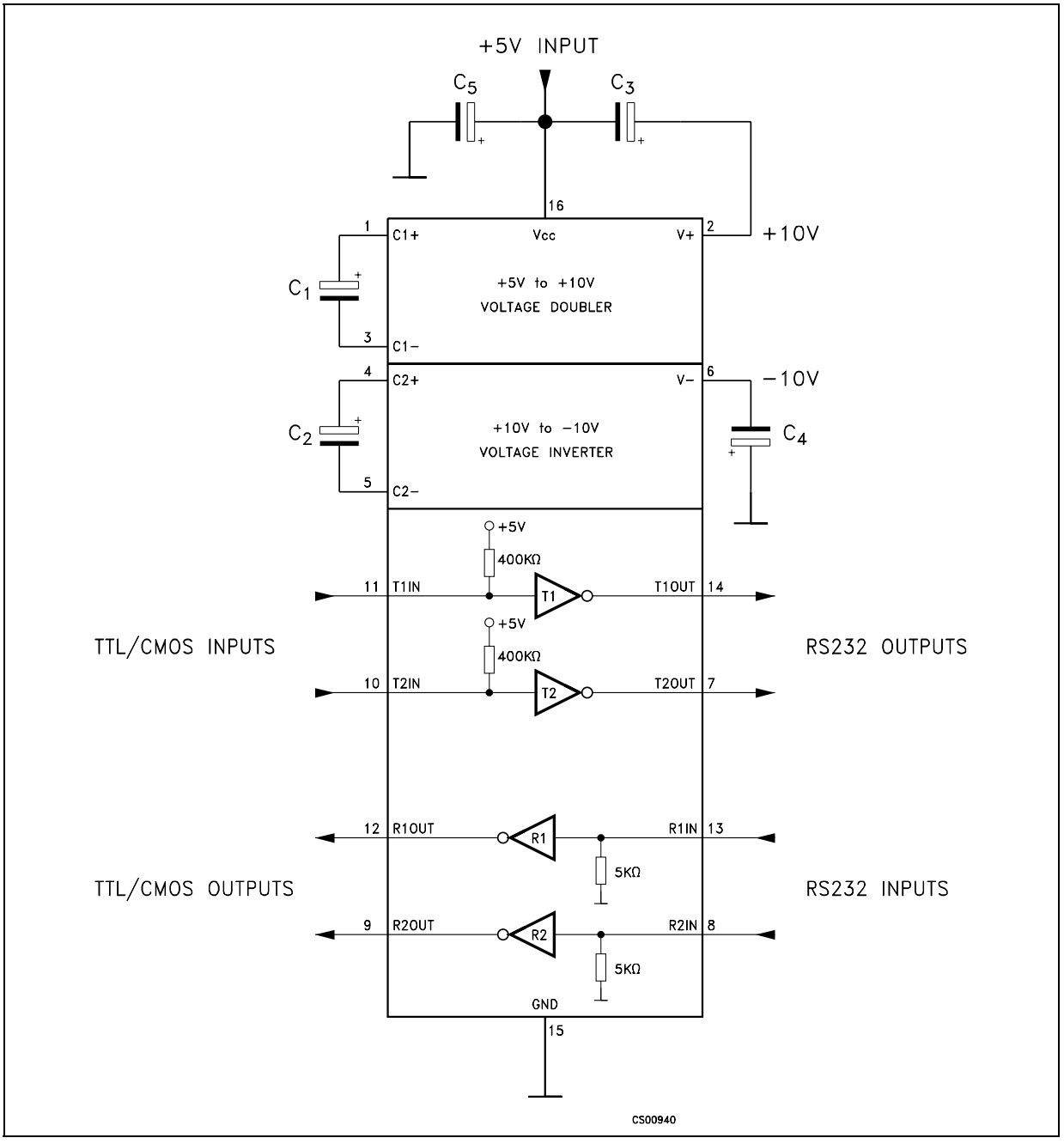

1. C_{1-4} capacitors can even be 1µF ones
2. C_{1-4} can be common or biased capacitors

Table 7. Capacitance value (µF)

C1	C2	C3	C4	C5
0.1	0.1	0.1	0.1	0.1

5 Typical performance characteristics

(Unless otherwise specified T_J = 25 °C)

Figure 3. Driver voltage transfer characteristics

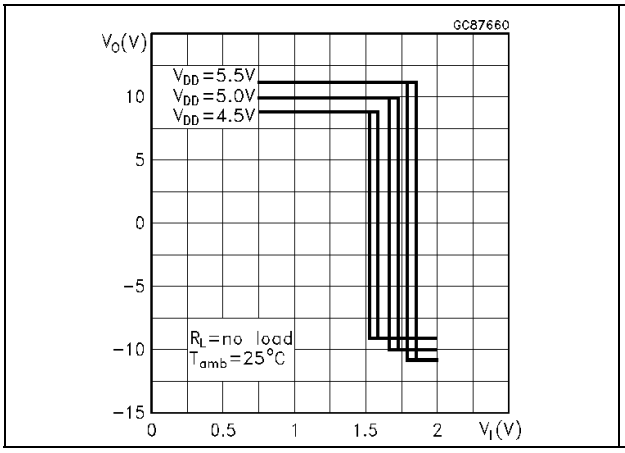

Figure 4. Drive short circuit output current vs temperature

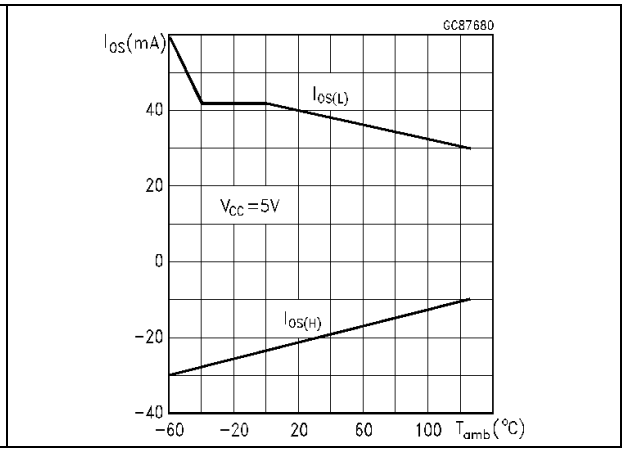

Figure 5. Receiver threshold vs supply voltage

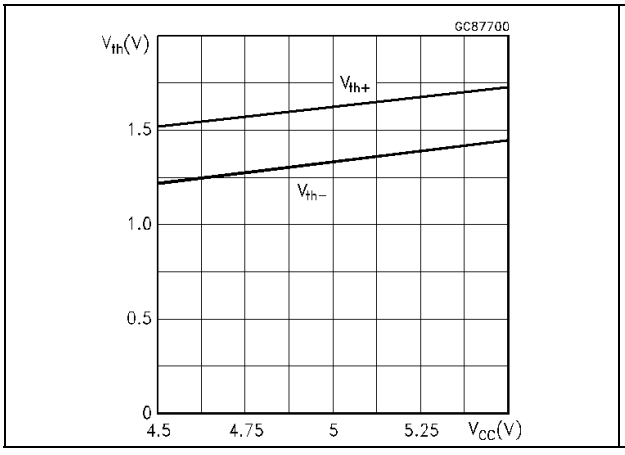

Figure 6. Driver output capability current vs output voltage

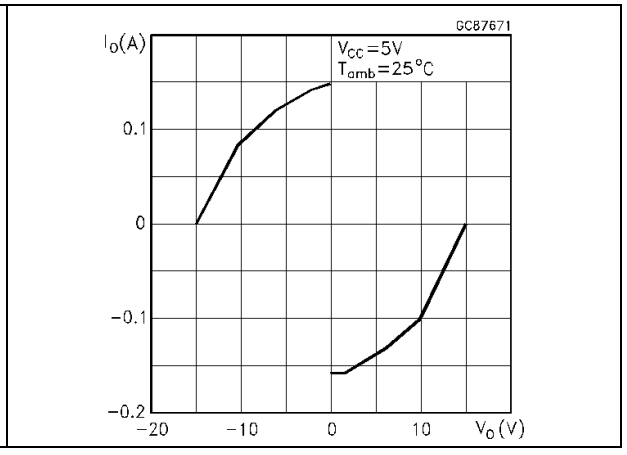

Figure 7. Driver short circuit supply current vs. temperature

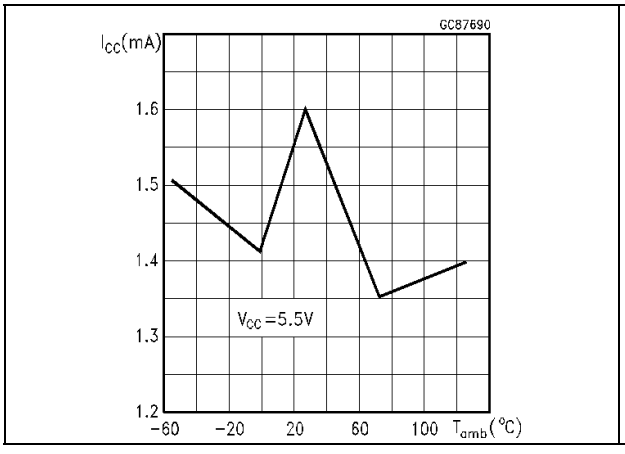

Figure 8. Receiver threshold vs temperature

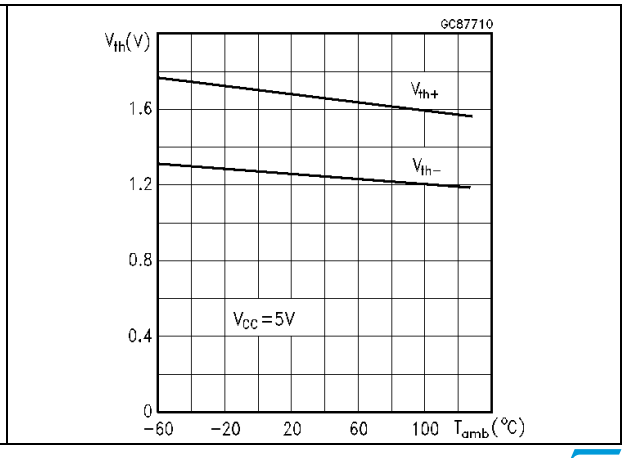

6 Package mechanical data

In order to meet environmental requirements, ST offers these devices in ECOPACK® packages. These packages have a lead-free second level interconnect. The category of second Level Interconnect is marked on the package and on the inner box label, in compliance with JEDEC Standard JESD97. The maximum ratings related to soldering conditions are also marked on the inner box label. ECOPACK is an ST trademark. ECOPACK specifications are available at: www.st.com.

Plastic DIP-16 (0.25) mechanical data

Dim.	mm.			inch.		
	Min.	Typ.	Max.	Min.	Typ.	Max.
a1	0.51			0.020		
B	0.77		1.65	0.030		0.065
b		0.5			0.020	
b1		0.25			0.010	
D			20			0.787
E		8.5			0.335	
e		2.54			0.100	
e3		17.78			0.700	
F			7.1			0.280
I			5.1			0.201
L		3.3			0.130	
Z			1.27			0.050

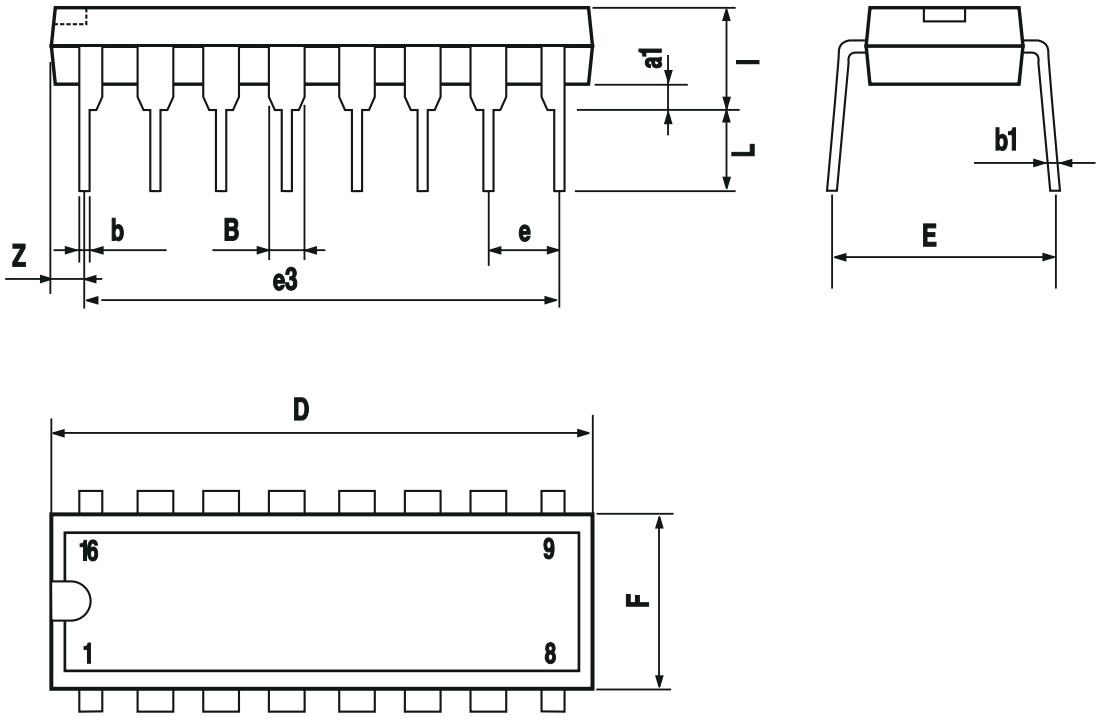

P001C

SO-16 mechanical data

Dim.	mm.			inch.		
	Min.	Typ.	Max.	Min.	Typ.	Max.
A			1.75			0.068
a1	0.1		0.25	0.004		0.010
a2			1.64			0.063
b	0.35		0.46	0.013		0.018
b1	0.19		0.25	0.007		0.010
C		0.5			0.019	
c1	45° (typ.)					
D	9.8		10	0.385		0.393
E	5.8		6.2	0.228		0.244
e		1.27			0.050	
e3		8.89			0.350	
F	3.8		4.0	0.149		0.157
G	4.6		5.3	0.181		0.208
L	0.5		1.27	0.019		0.050
M			0.62			0.024
S	8° (max.)					

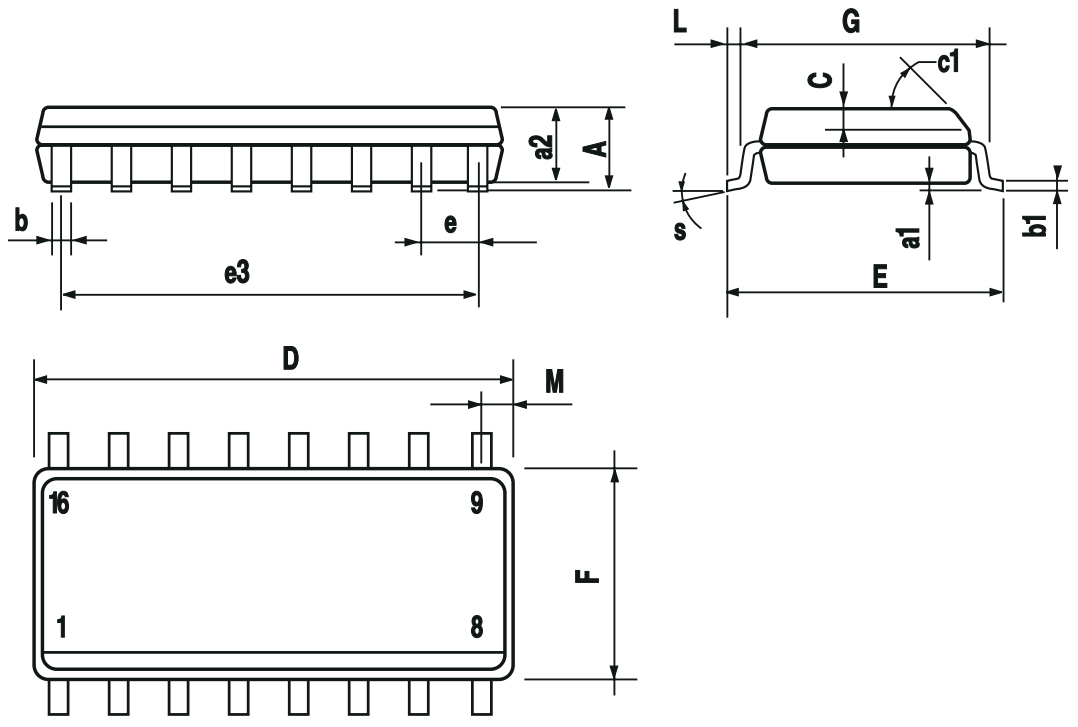

0016020D

SO-16L mechanical data

Dim.	mm.			inch.		
	Min.	Typ.	Max.	Min.	Typ.	Max.
A			2.65			0.104
a1	0.1		0.2	0.004		0.008
a2			2.45			0.096
b	0.35		0.49	0.014		0.019
b1	0.23		0.32	0.009		0.012
C		0.5			0.020	
c1	45° (typ.)					
D	10.1		10.5	0.397		0.413
E	10.0		10.65	0.393		0.419
e		1.27			0.050	
e3		8.89			0.350	
F	7.4		7.6	0.291		0.300
G						
L	0.5		1.27	0.020		0.050
M			0.75			0.029
S	8° (max.)					

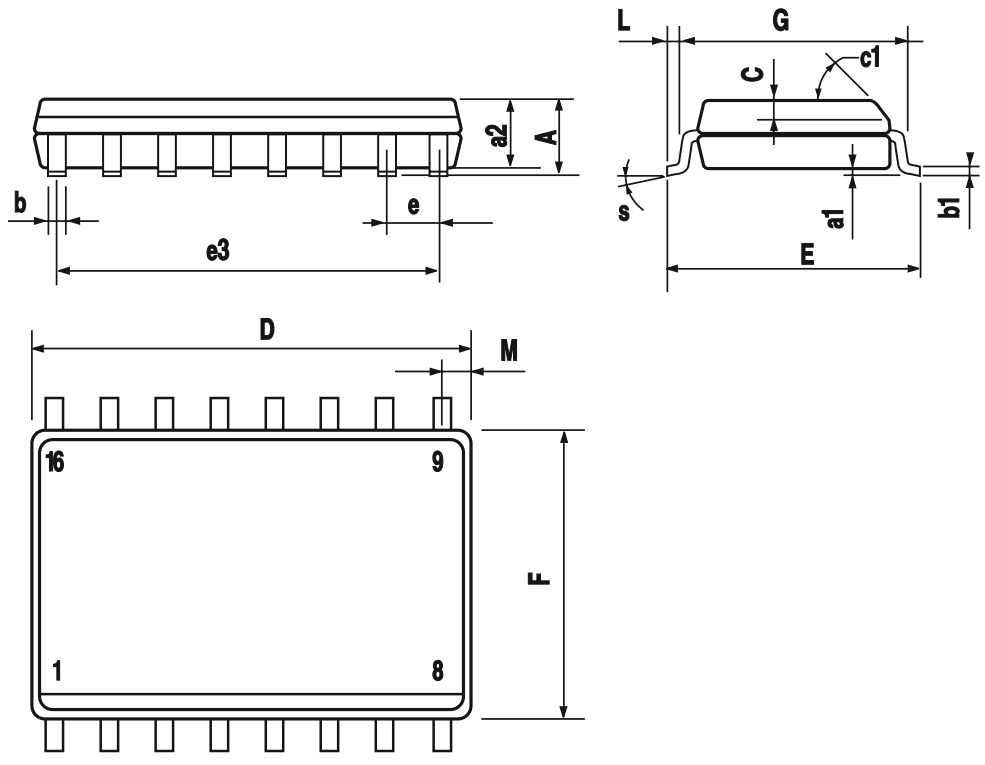

PO13I

TSSOP16 mechanical data

Dim.	mm.			inch.		
	Min.	Typ.	Max.	Min.	Typ.	Max.
A			1.2			0.047
A1	0.05		0.15	0.002	0.004	0.006
A2	0.8	1	1.05	0.031	0.039	0.041
b	0.19		0.30	0.007		0.012
c	0.09		0.20	0.004		0.0079
D	4.9	5	5.1	0.193	0.197	0.201
E	6.2	6.4	6.6	0.244	0.252	0.260
E1	4.3	4.4	4.48	0.169	0.173	0.176
e		0.65 BSC			0.0256 BSC	
K	0°		8°	0°		8°
L	0.45	0.60	0.75	0.018	0.024	0.030

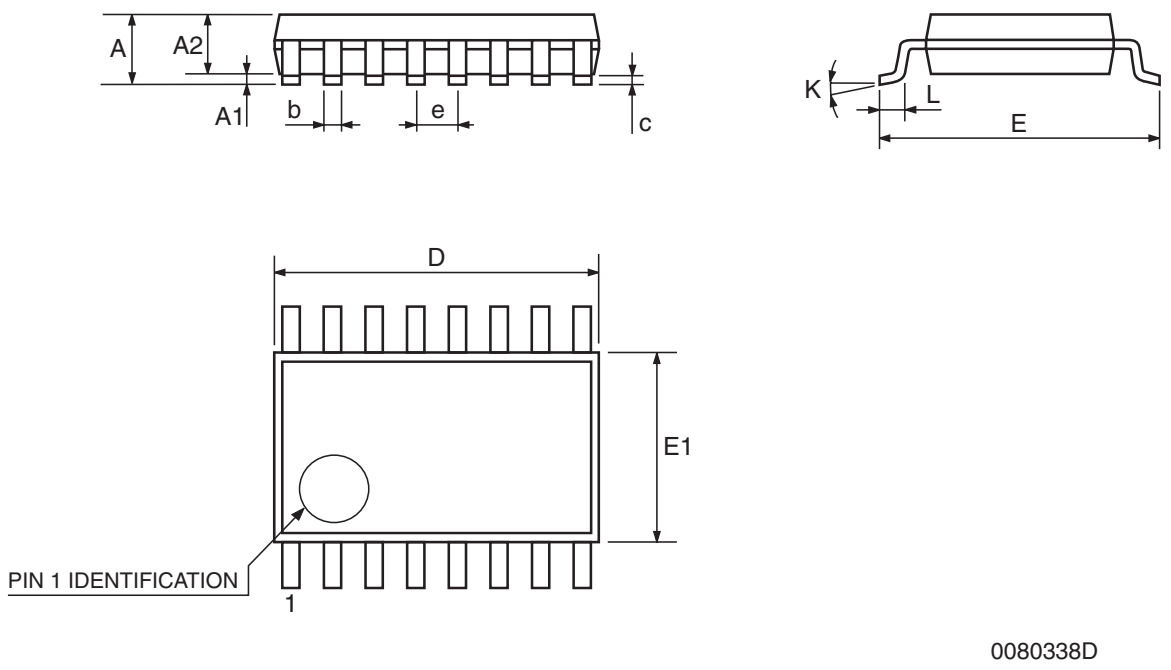

Tape & reel SO-16 mechanical data

Dim.	mm.			inch.		
	Min.	Typ.	Max.	Min.	Typ.	Max.
A			330			12.992
C	12.8		13.2	0.504		0.519
D	20.2			0.795		
N	60			2.362		
T			22.4			0.882
Ao	6.45		6.65	0.254		0.262
Bo	10.3		10.5	0.406		0.414
Ko	2.1		2.3	0.082		0.090
Po	3.9		4.1	0.153		0.161
P	7.9		8.1	0.311		0.319

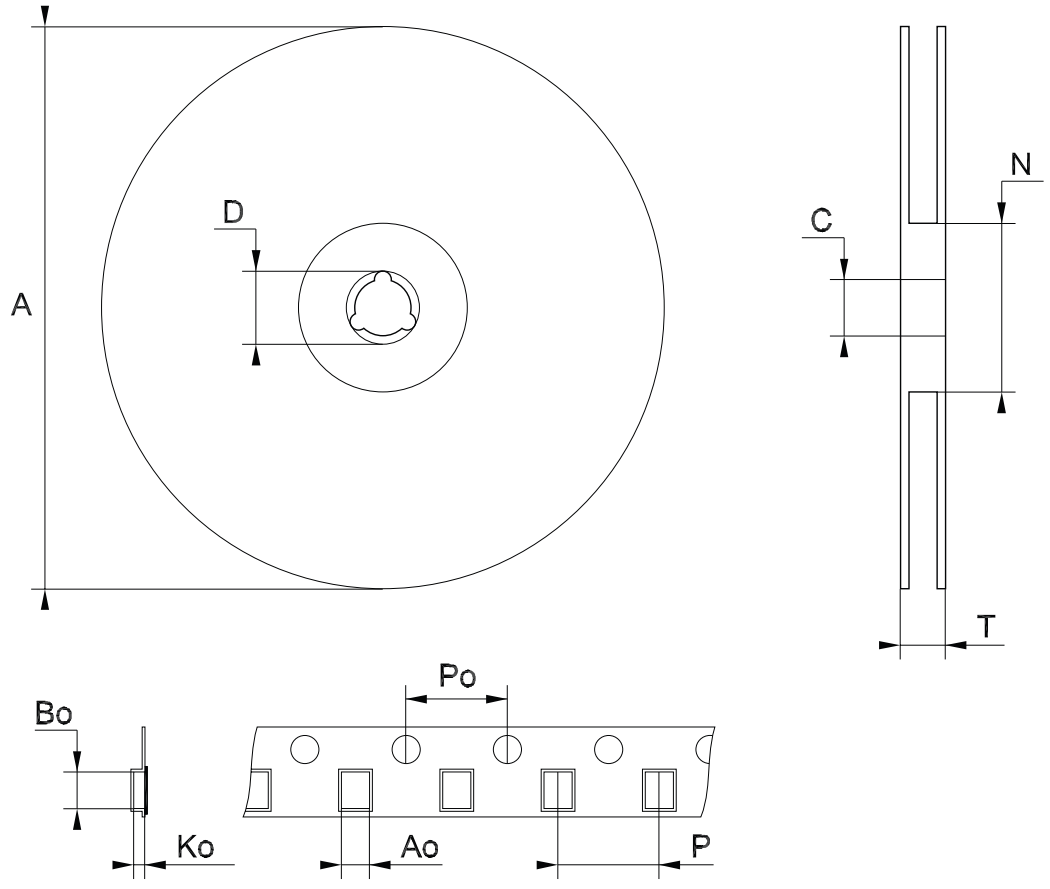

Note: Drawing not in scale

Tape & reel SO-16L mechanical data

Dim.	mm.			inch.		
	Min.	Typ.	Max.	Min.	Typ.	Max.
A			330			12.992
C	12.8		13.2	0.504		0.519
D	20.2			0.795		
N	60			2.362		
T			22.4			0.882
Ao	10.8		11.0	0.425		0.433
Bo	10.7		10.9	0.421		0.429
Ko	2.9		3.1	0.114		0.122
Po	3.9		4.1	0.153		0.161
P	11.9		12.1	0.468		0.476

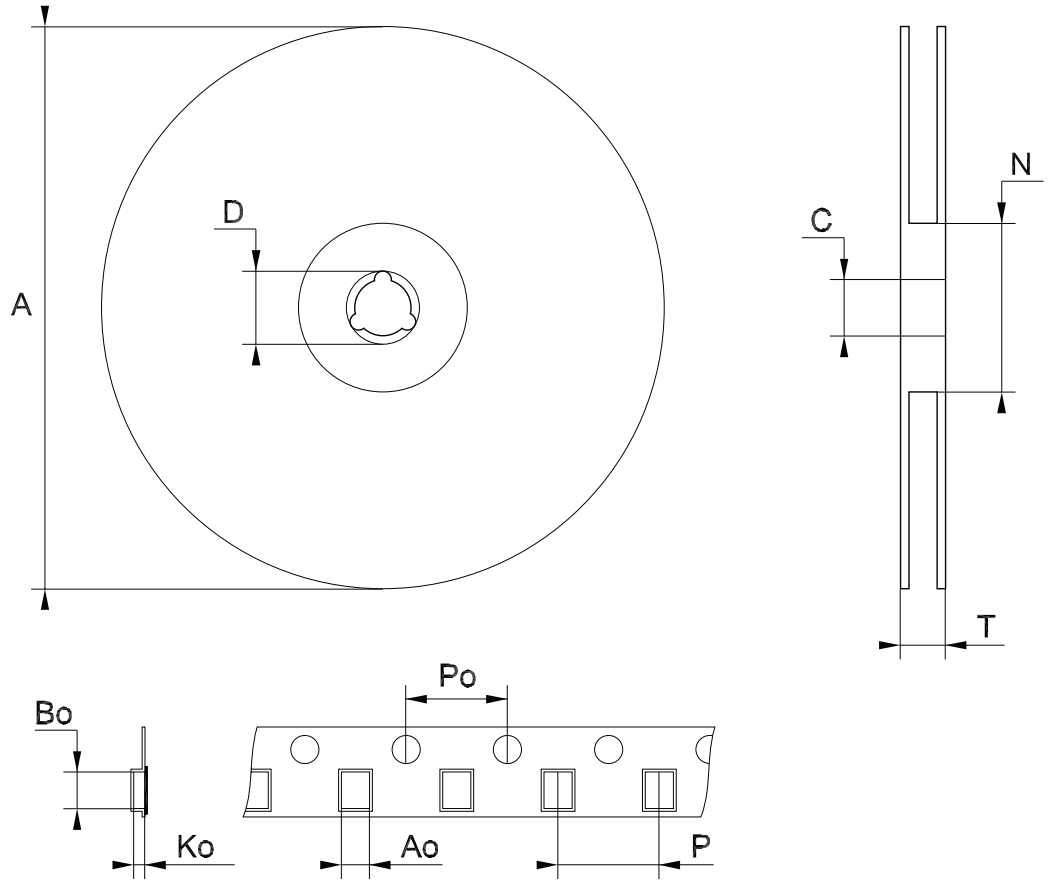

Note: Drawing not in scale

Tape & reel TSSOP16 mechanical data

Dim.	mm.			inch.		
	Min.	Typ.	Max.	Min.	Typ.	Max.
A			330			12.992
C	12.8		13.2	0.504		0.519
D	20.2			0.795		
N	60			2.362		
T			22.4			0.882
Ao	6.7		6.9	0.264		0.272
Bo	5.3		5.5	0.209		0.217
Ko	1.6		1.8	0.063		0.071
Po	3.9		4.1	0.153		0.161
P	7.9		8.1	0.311		0.319

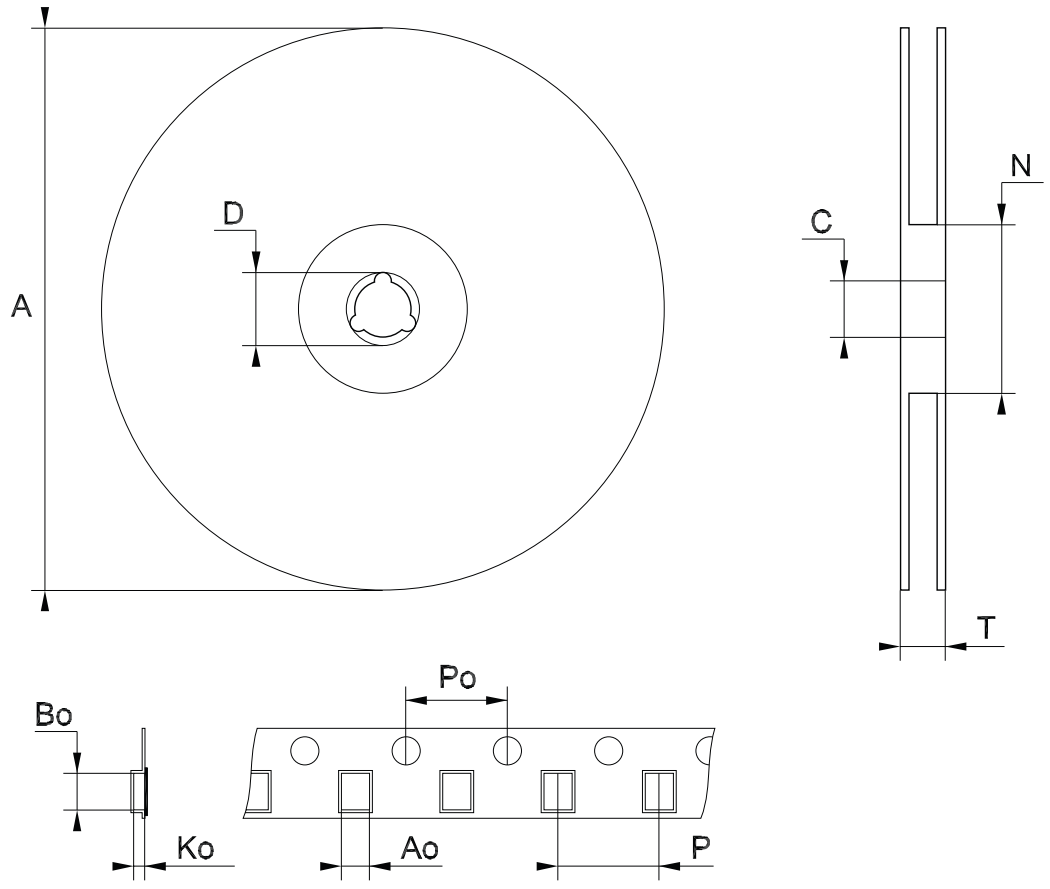

Note: Drawing not in scale

7 Revision history

Table 8. Document revision history

Date	Revision	Changes
09-Mar-2006	5	Order codes updated and the document has been reformatted.
16-Jul-2007	6	Device summary updated.
14-Nov-2007	7	Modified: *Table 1*.

Please Read Carefully:

Information in this document is provided solely in connection with ST products. STMicroelectronics NV and its subsidiaries (“ST”) reserve the right to make changes, corrections, modifications or improvements, to this document, and the products and services described herein at any time, without notice.

All ST products are sold pursuant to ST’s terms and conditions of sale.

Purchasers are solely responsible for the choice, selection and use of the ST products and services described herein, and ST assumes no liability whatsoever relating to the choice, selection or use of the ST products and services described herein.

No license, express or implied, by estoppel or otherwise, to any intellectual property rights is granted under this document. If any part of this document refers to any third party products or services it shall not be deemed a license grant by ST for the use of such third party products or services, or any intellectual property contained therein or considered as a warranty covering the use in any manner whatsoever of such third party products or services or any intellectual property contained therein.

UNLESS OTHERWISE SET FORTH IN ST’S TERMS AND CONDITIONS OF SALE ST DISCLAIMS ANY EXPRESS OR IMPLIED WARRANTY WITH RESPECT TO THE USE AND/OR SALE OF ST PRODUCTS INCLUDING WITHOUT LIMITATION IMPLIED WARRANTIES OF MERCHANTABILITY, FITNESS FOR A PARTICULAR PURPOSE (AND THEIR EQUIVALENTS UNDER THE LAWS OF ANY JURISDICTION), OR INFRINGEMENT OF ANY PATENT, COPYRIGHT OR OTHER INTELLECTUAL PROPERTY RIGHT.

UNLESS EXPRESSLY APPROVED IN WRITING BY AN AUTHORIZED ST REPRESENTATIVE, ST PRODUCTS ARE NOT RECOMMENDED, AUTHORIZED OR WARRANTED FOR USE IN MILITARY, AIR CRAFT, SPACE, LIFE SAVING, OR LIFE SUSTAINING APPLICATIONS, NOR IN PRODUCTS OR SYSTEMS WHERE FAILURE OR MALFUNCTION MAY RESULT IN PERSONAL INJURY, DEATH, OR SEVERE PROPERTY OR ENVIRONMENTAL DAMAGE. ST PRODUCTS WHICH ARE NOT SPECIFIED AS "AUTOMOTIVE GRADE" MAY ONLY BE USED IN AUTOMOTIVE APPLICATIONS AT USER’S OWN RISK.

Resale of ST products with provisions different from the statements and/or technical features set forth in this document shall immediately void any warranty granted by ST for the ST product or service described herein and shall not create or extend in any manner whatsoever, any liability of ST.

ST and the ST logo are trademarks or registered trademarks of ST in various countries.

Information in this document supersedes and replaces all information previously supplied.

The ST logo is a registered trademark of STMicroelectronics. All other names are the property of their respective owners.

© 2007 STMicroelectronics - All rights reserved

STMicroelectronics group of companies

Australia - Belgium - Brazil - Canada - China - Czech Republic - Finland - France - Germany - Hong Kong - India - Israel - Italy - Japan - Malaysia - Malta - Morocco - Singapore - Spain - Sweden - Switzerland - United Kingdom - United States of America

www.st.com